EEVMATE

Instructions

The EEVMATE is a tool for HVAC mechanics to test, manually drive, calibrate and free stuck unipolar stepper motor driven electronic expansion valves. Read these instructions carefully before use.

KIT INCLUDES



EEVMATE tool



Adapter cable 2.5
6-pin male end, 5-pin female end



USB power converter
5 VDC in, 12 VDC out



Splice adapter
For field use and custom adaptation



Battery caddy and 9V battery adapter
Battery not included

WIRING DIAGRAM: ADAPTER CABLE 2.5

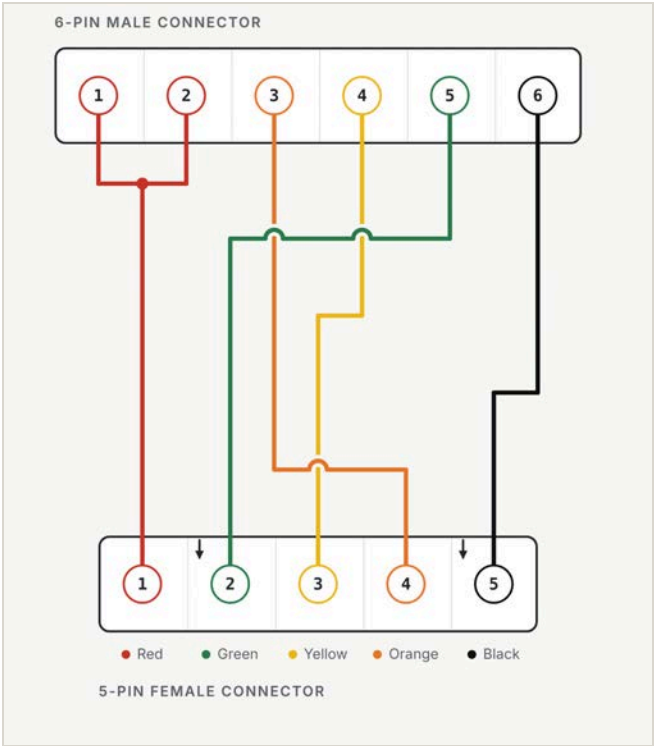

Figure 1. Adapter cable wiring, 6-pin male connector to 5-pin female connector. Arrows mark the latches. This is provided as a template for the splice adapter. Wire as shown.

This product is NOT waterproof.

Moisture on the internals will destroy the electronics.

Improper use of this product may cause damage to equipment. Use responsibly.

Warranty: this product comes with a 1-year warranty. Damage from moisture, or from trauma to the OLED display, is not covered.

Technical support: techsupport@eevmate.com

SPECIFICATIONS

MAX CURRENT	**1 A**
TOOL VOLTAGE LIMITS	**5 VDC to 12 VDC**
POWER CONVERTER	**Input 5 VDC, output 12 VDC**
ADAPTER CABLE PIN SPACING	**2.5 mm**

CONFIGURATION

Connect the adapter cable to the motor

The adapter cable fits many 5-pin and 6-pin horizontal wire harness connectors. On the 6-pin male end, pins are numbered 1 through 6, and a red marking shows the pin 1 end. Pins 1 and 2 are common (see Figure 1).

Color schemes and pin-outs vary, but most motors use one or two wires colored red, red and brown, or grey as common.

1. **6-pin motor connector:** plug the male 6-pin end of the adapter cable into the motor's connector, matching the commons (see Figures 3 and 4).
2. **5-pin motor connector:** plug in the adapter so pin 1 of the 6-pin end (the red-marked pin) hangs over the edge of the motor's connector, unused (see Figure 2).
3. Connect the 5-pin female connector to the tool.

The supplied splice adapter can be used for terminal block or splice connections and for building custom adapters. Use the wiring diagram in Figure 1 as a guide.

Power the tool

Choose one power source:

- **USB power converter:** plug the male USB end into a 5 VDC source and the male barrel connector into the tool. *Note: the 5 VDC supply must have a minimum output rating of 1 A. Laptop data ports are not adequate.*
- **9V battery:** slide the battery caddy over the tool, slide a 9V battery into the caddy, and connect the tool using the 9V battery adapter.

> **Note:** Battery life varies between manufacturers. A low battery can make the tool appear operational without giving the valve enough power to operate. A dimming of the on-board LEDs that flash while driving is a good sign the battery is low.

Switch on

Set the 1/0 switch to the 1 position.

CONNECTION EXAMPLES

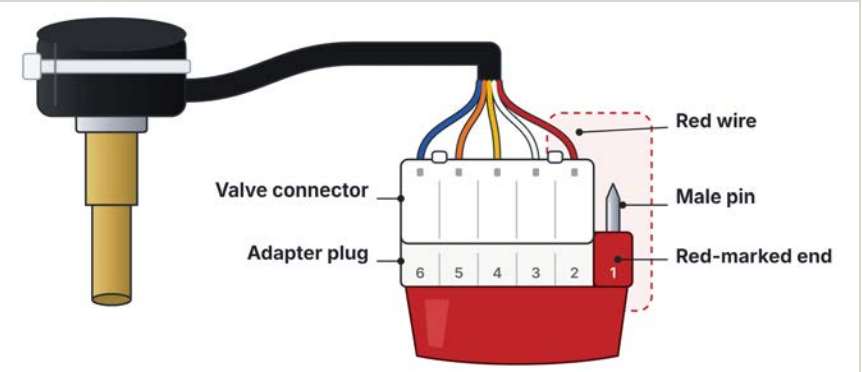

Figure 2. 5-pin motor connector. Pin 1 of the adapter (red-marked end) overhangs the connector, and its male pin is left exposed and unused.

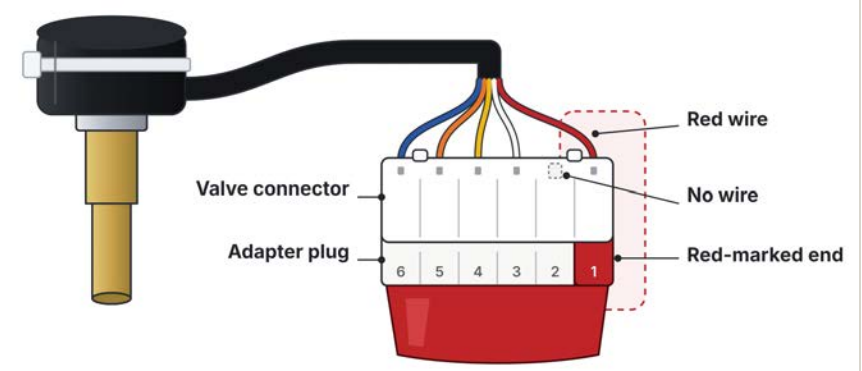

Figure 3. 6-pin motor connector with the red wire on pin 1 and no wire on pin 2. The red-marked end sits under pin 1.

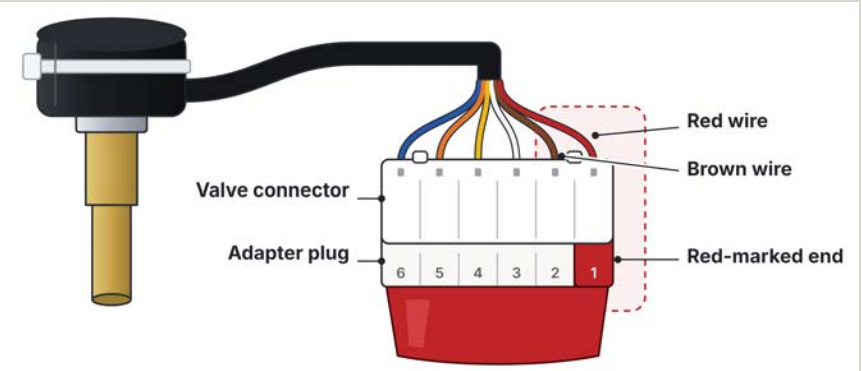

Figure 4. 6-pin motor connector with red on pin 1 and brown on pin 2, the common pair.

OPERATION

Joystick controls

- **Direction:** push the joystick up or down to switch rotation. The relationship between joystick direction and valve direction (open or close) varies.
- **Speed:** vary the up or down pressure on the joystick.
- **Turbo mode:** press the joystick inward before throttling up or down to activate turbo mode.

MODE	TOP SPEED	LIVE COUNT ON SCREEN
Normal	20-25 pulses per second	Yes
Turbo	200-220 pulses per second	No. The count shows once the throttle is released.

Pulse count

Each pulse is counted and shown on the on-board OLED display. Driving the joystick down subtracts from the count, and driving it up adds to it. The count runs from -20000 to 20000, and resets to 0 when it reaches either limit.

Checking the LEDs

Four red LEDs are wired in parallel with the output circuit to each phase. They should light in pairs (2-2 phase excitation*), and at low speeds you can see the light shift left to right or right to left depending on throttle direction. This shows power is reaching each phase of your motor. At high throttle the shift is too fast to see and all four LEDs should appear lit.

If the LEDs do not behave this way, there may be a problem with your wiring, the motor being tested, or the tool.

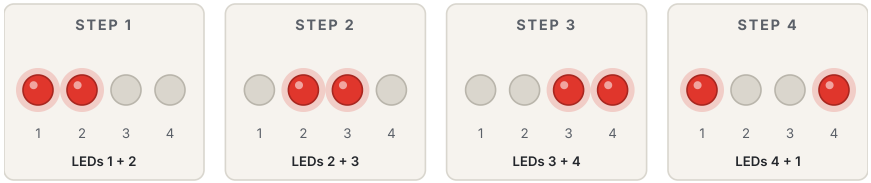

2-2 phase excitation. Two of the four red LEDs are lit at any moment, and the lit pair steps left to right (or right to left when you reverse the joystick). At high throttle the steps are too fast to see and all four LEDs appear lit. Turbo mode can be used to verify the correct sequence: throttle, then return the joystick to center, and the lights will pause and hold at a pair.

**The tool is programmed with 2-2 phase excitation. It should be able to drive a motor on a system that uses 1-2 phase excitation, but it cannot precisely replicate that system's control sequence.*

USING THE JOYSTICK

